ACTUATOR: 9804 SL039

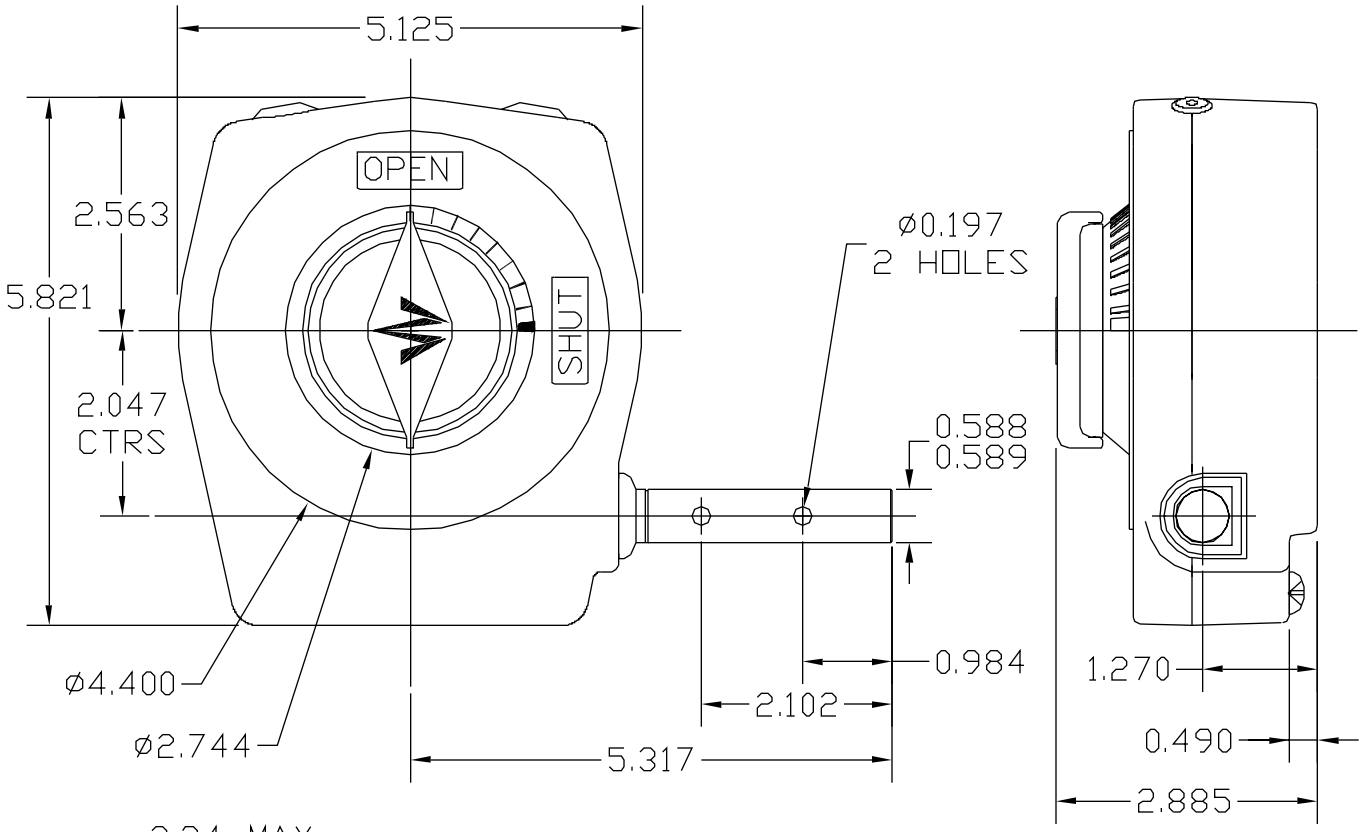

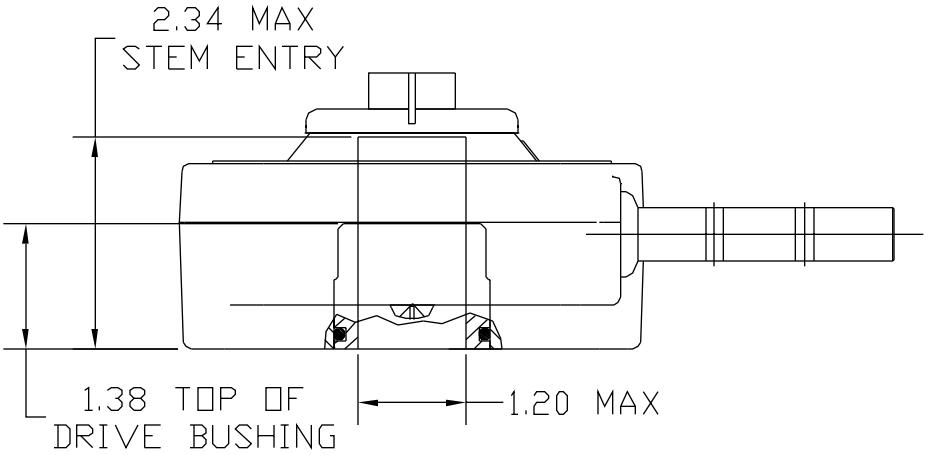

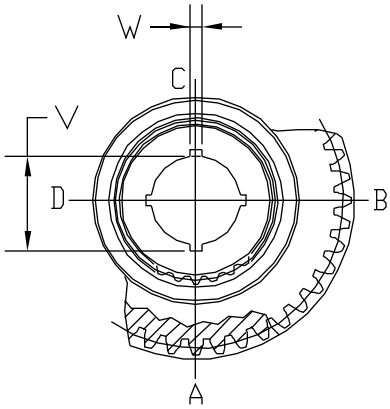

OUTPUT KEYWAY DETAILS
(SHOWN IN OPEN POSITION)

GENERAL INFORMATION

TRAVEL.....90° ±5° AT BOTH ENDS
RATIO.....40:1
TURNS TO CLOSE.....10
MECH. ADVANTAGE....11 ±10%

MAX. OUTPUT TORQUE (1000 CYCLES)...5280 IN-LBS
MAX. OUTPUT TORQUE (2000 CYCLES)..4400 IN-LBS
MAX. INPUT TORQUE (1000 CYCLES).....480 IN-LBS
MAX. INPUT TORQUE (2000 CYCLES).....400 IN-LBS

MOUNTING HOLE DETAIL: PREFERRED....FA12 (4 x 1/2-13 ON 4.95 BCD)
(MSS SP-101) MAXIMUM.....FA12
MINIMUM.....FA07 (4 x 5/16-18 ON 2.75 BCD)

APPROXIMATE WEIGHT.....5.0 LB

MASTERGEAR
VL MOTION SYSTEMS INC.
WWW.MASTERGEAR.CA

DIMENSIONS IN INCHES	SCALE	DRAWING No.
	1:2	9804

THIS PRINT IS CONFIDENTIAL AND IS THE PROPERTY OF MASTERGEAR. THIS PRINT SHALL NOT BE USED, COPIED OR REPRODUCED IN WHOLE OR IN PART NOR SHALL THE CONTENTS BE REVEALED IN ANY MANNER TO ANYONE UNLESS WRITTEN PERMISSION IS OBTAINED FROM MASTERGEAR. ©

NJC

REV. A
4/14/05